audio-technica

# ATH-M50xSTS-WL

Streaming Headset

## User Manual

English

# Safety precautions

Although this product was designed to be used safely, failing to use it correctly may result in an accident. To ensure safety, observe all warnings and cautions while using the product.

## Cautions for the product

- Do not use the product near medical equipment. Radio waves may affect cardiac pacemakers and medical electronic equipment. Do not use the product inside medical facilities.
- When using the product in aircraft, follow airline instructions.
- Do not use the product near automatic control devices such as automatic doors and fire alarms. Radio waves may affect electronic equipment and cause accidents due to malfunction.
- Do not disassemble, modify or attempt to repair the product to avoid electric shock, malfunction or fire.
- Do not subject the product to strong impact to avoid electric shock, malfunction or fire.
- Do not handle the product with wet hands to avoid electric shock or injury.
- Disconnect the product from a device if the product begins to malfunction, producing smoke, odor, heat, unwanted noise or showing other signs of damage. In such a case, contact your local Audio-Technica dealer.
- Do not allow the product to get wet to avoid electric shock or malfunction.
- Do not put foreign matter such as combustible materials, metal, or liquid in the product.
- Do not cover the product with a cloth to avoid fire or injury by overheating.
- Follow applicable laws regarding mobile phone and headphone use if using headphones while driving.
- Do not use the product in places where the inability to hear ambient sound presents a serious risk (such as at railroad crossings, train stations, and construction sites).
- Do not charge the battery if the terminal of the USB charging cable is bent, loose, or damaged. Doing so may cause heat generation, smoke emission, fire or electric shock.
- Do not charge the product if water or foreign matter is on the USB connector jack or the included USB cable. Doing so may cause corrosion, heat generation, smoke, fire, malfunction, or electric shock.
- To prevent damage to your hearing, do not raise the volume too high. Listening to loud sound for an extended period may cause temporary or permanent hearing loss.
- Discontinue use if skin irritation results from direct contact with the product.
- Do not catch your fingers or other body parts between the housing and the arm or inside the joints.
- When using a commercially sold USB power adapter or power bank for charging, use a device with an output current of 0.5 A (500 mA) or higher. However, do not charge with devices that have quick-charge functionality (with a voltage of 5 V or more). Doing so may cause the product to failure of charging or malfunction.

# Cautions for rechargeable battery

The product is equipped with a rechargeable battery (lithium ion battery).

- If battery fluid gets into eyes, do not rub them. Rinse thoroughly with clean water such as tap water and consult a doctor immediately.
- If battery fluid leaks, do not touch fluid with bare hands. If fluid remains inside the product, it may cause malfunction. If battery fluid leaks, contact your local Audio-Technica dealer.
  – If fluid gets in your mouth, gargle thoroughly with clean water such as tap water and consult a doctor immediately.
  – If your skin or clothing comes in contact with fluid, immediately wash the affected skin or clothing with water. If you experience skin irritation, consult a doctor.
- To avoid leakage, generation of heat or explosion:
  – Never heat, disassemble or modify the battery, nor dispose of it in a fire.
  – Do not attempt to pierce with a nail, hit with a hammer or step on the battery.
  – Do not drop the product or subject it to strong impact.
  – Do not get the battery wet.
- Do not use, leave or store the battery in the following places:
  – Area exposed to direct sunlight or high temperatures and humidity
  – Inside of a car under the blazing sun
  – Near heat sources such as heat registers
- Charge only with the included USB cable to avoid malfunction or fire.
- The internal rechargeable battery of this product cannot be replaced by the user. The battery may have reached the end of its service life if the usage time becomes significantly shorter even after the battery has been fully charged. If this is the case, the battery needs to be repaired. Contact your local Audio-Technica dealer for repair details.
- When the product is disposed of, the built-in rechargeable battery needs to be discarded properly. Contact your local Audio-Technica dealer to learn how to properly dispose of the battery.

# For customers in the USA

## FCC Notice

Warning

This device complies with Part 15 of the FCC Rules. Operation is subject to the following two conditions: (1) This device may not cause harmful interference, and (2) this device must accept any interference received, including interference that may cause undesired operation.

Caution

You are cautioned that any changes or modifications not expressly approved in this manual could void your authority to operate this equipment.
Note: This equipment has been tested and found to comply with the limits for a Class B digital device, pursuant to part 15 of the FCC Rules. These limits are designed to provide reasonable protection against harmful interference in a residential installation. This equipment generates, uses and can radiate radio frequency energy and, if not installed and used in accordance with the instructions, may cause harmful interference to radio communications. However, there is no guarantee that interference will not occur in a particular installation. If this equipment does cause harmful interference to radio or television reception, which can be determined by turning the equipment off and on, the user is encouraged to try to correct the interference by one or more of the following measures:
– Reorient or relocate the receiving antenna.
– Increase the separation between the equipment and receiver.
– Connect the equipment to an outlet on a circuit different from that to which the receiver is connected.
– Consult the dealer or an experienced radio/TV technician for help.
This transmitter must not be co-located or operated in conjunction with any other antenna or transmitter used in other systems.

RF Exposure Statement

This device complies with FCC radiation exposure limits set forth for an uncontrolled environment and meets the FCC radio frequency (RF) Exposure Guidelines. This equipment has very low levels of RF energy that is deemed to comply without testing of specific absorption rate (SAR).

Contact:

Responsible Company: Audio-Technica U.S., Inc.
Address: 1221 Commerce Drive, Stow, Ohio 44224, USA
Tel: 330-686-2600

# For customers in Canada

## ISED statement

CAN ICES(B)/NMB(B)

This device contains licence-exempt transmitter(s)/receiver(s) that comply with Innovation, Science and Economic Development Canada's licence-exempt RSS(s). Operation is subject to the following two conditions:
(1) This device may not cause interference.
(2) This device must accept any interference, including interference that may cause undesired operation of the device.
This device complies with RSS-102 radiation exposure limits set forth for an uncontrolled environment.

# Notes on use

- Be sure to read the connected device's user manual before use.
- Audio-Technica will not be liable in any way for any loss of data in the unlikely event that such losses should occur while using the product.
- On public transportation or in other public places, keep the volume low so as not to disturb other people.
- Minimize the volume on your device before connecting the product.
- When using the product in a dry environment, you may feel a tingling sensation in your ears. This is caused by static electricity accumulated on your body, not by product malfunction.
- Do not subject the product to strong impact.
- Do not store the product in direct sunlight, near heating devices, or in hot, humid, or dusty places. Additionally, do not allow the product to get wet.
- When the product is used for a long time, the product may become discolored due to ultraviolet light (especially direct sunlight) and wear.
- If the product is placed in a bag while the USB charging cable is still connected, the USB charging cable may become caught, severed, or broken.
- Make sure to hold the plug when connecting and disconnecting the USB charging cable. The USB charging cable may become severed or an accident may occur if you pull on the cable itself.
- When you are not using the USB charging cable, disconnect it from the product.
- Do not bring a magnetic card, etc. close to the transceiver. It may cause a malfunction.
- If the transceiver is connected to the USB port on the back of your computer, the radio wave may be interrupted. In that case, connect to the USB port on the side or front of your computer.
- If you use the product near an electronic device or transmitter (such as a mobile phone), unwanted noise may be heard. In this case, move the product away from the electronic device or transmitter.
- If you use the product near a radio antenna, noise may be seen or heard in the radio signal. In this case, move the product away from the radio antenna.
- To protect the built-in rechargeable battery, charge it at least once every 6 months. If too much time passes between charges, the life of the rechargeable battery may be reduced, or the rechargeable battery may no longer be able to be charged.
- Charge the product in a well-ventilated place (10 to 35°C (50 to 95°F)) away from direct sunlight. Otherwise, the battery may deteriorate, possibly resulting in shorter periods of continuous use or may fail to charge.
- If the product is wet with sweat, wipe off any moisture with a dry cloth before charging.
- Do not use the product near a Wi-Fi router. In rare cases, interference may cause the connection between the headset and the transceiver to be lost.

# About the noise reduction function

The noise reduction function reduces ambient noise picked up by the microphone to transmit your voice more clearly.

- Select one of two levels, “Low” or “High”, or select “OFF” to suit your environment.
- Not all ambient noise can be reduced.
- Depending on the type of noise and the environment, the noise reduction function may not be fully effective.

# Part names and functions

## Headset

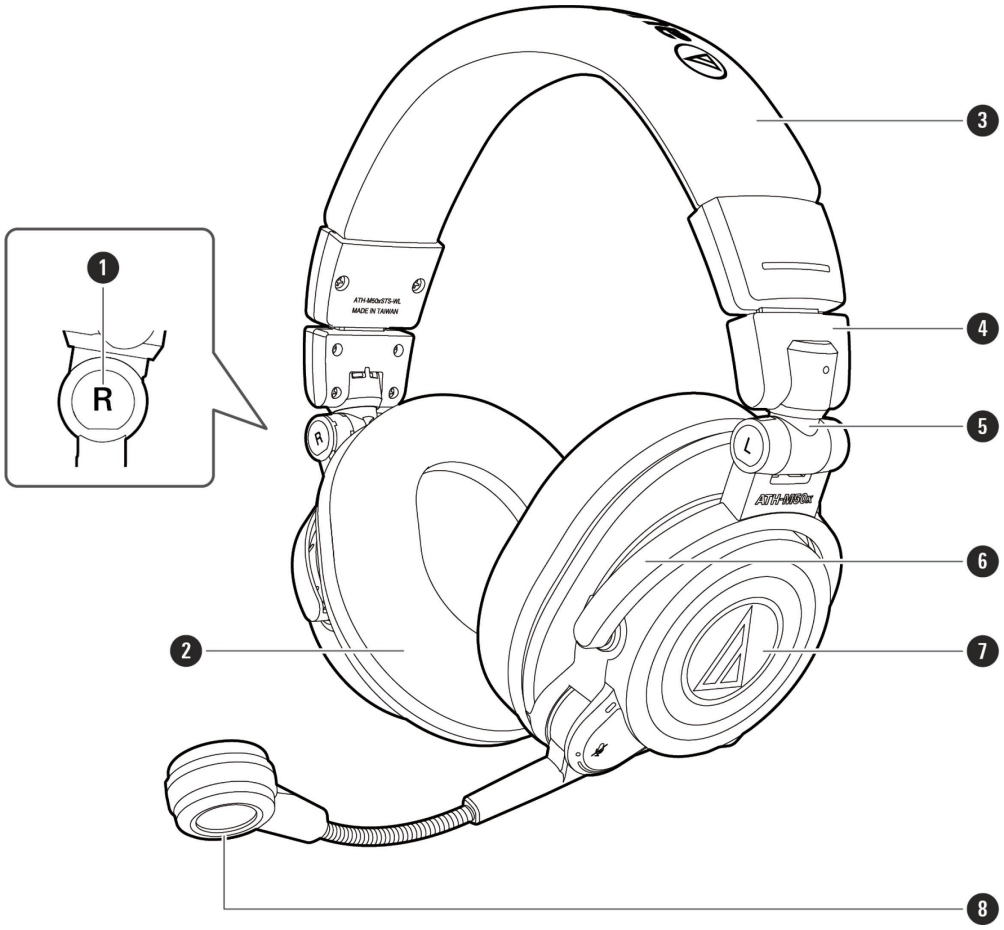


1. L/R (left/right) indicator position.
2. Earpad
3. Headband
4. Slider
5. Joint
6. Arm
7. Housing
8. Microphone

# Operation area

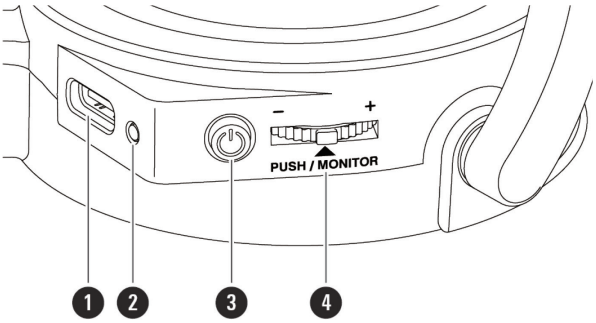


❶ USB connector jack

Use to connect the included USB cable for charging and wired connection.

❷ Indicator lamp

Displays the operating status and battery level of the headset.

❸ Power supply / control button

Use to turn the power ON/OFF and operate the noise reduction function.

❹ Monitor dial

Use to adjust the headphone volume or monitor your voice.

# Accessories

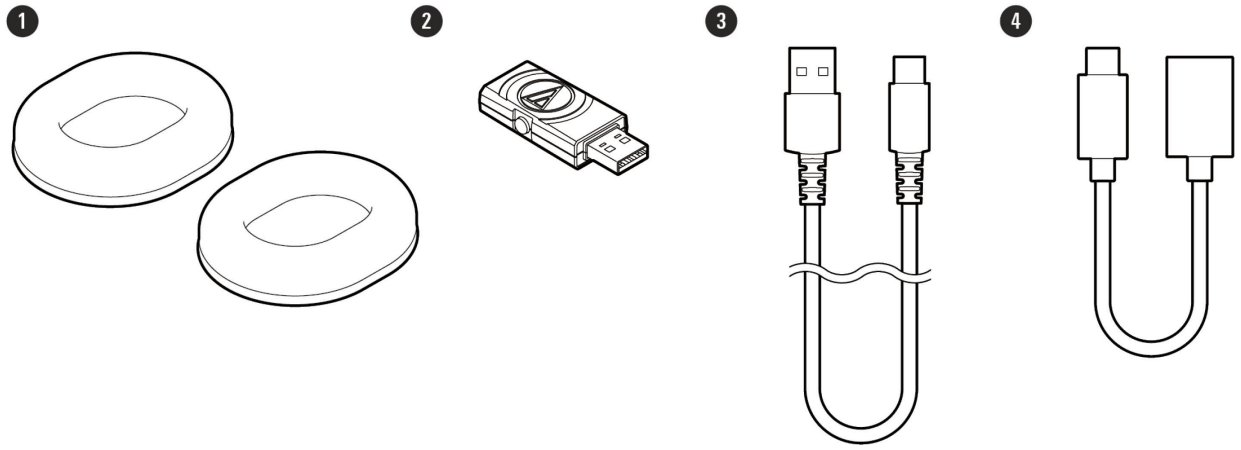

❶ Earpads (HP-M50x)

At the time of purchase, the earpads (HP-M50xSTS) that are made of mesh material with excellent air permeability for increased comfort are attached to the headset.

❷ Transceiver (USB Type-A)

The transceiver's button is used for manual pairing. For details, see "Pairing manually" (p. 27).

❸ USB cable (2 m (6.6'), USB Type-C / USB Type-A).

❹ USB conversion adapter cable (USB Type-A / USB Type-C™)

## Earpads

There are two types of earpads for this product. Use the earpads for whichever of these purposes suits your needs.

| Earpad type | Description |
|---|---|
| Mesh earpads<br>(HP-M50xSTS) | These earpads are made of mesh material with excellent air permeability for increased comfort. At the time of purchase, these earpads are attached to the headset. |
| Leather earpads<br>(HP-M50x) | These are the same earpads used on the ATH-M50x. They are made of leather material and stress audio quality and sound isolation. |

# Charging the battery

- Fully charge the battery when using for the first time.
- When the rechargeable battery is running low, the voice guidance will play the message “Low battery”. Charge the battery as soon as possible.
- It takes about 3.5 hours maximum to charge the battery fully. (This time may vary depending on usage conditions.)
- Charge the headset in a well-ventilated place (10 to 35°C (50 to 95°F)) away from direct sunlight. Otherwise, the battery may deteriorate, possibly resulting in shorter periods of continuous use or may fail to charge.

## Charging using a computer

**1** Connect the included USB cable (USB Type-C side) to the headset’s USB connector jack.

- The included USB cable is designed for exclusive use with the headset. Do not use any other USB cable.
- When inserting the USB cable into the USB connector jack, insert it straight (horizontally).

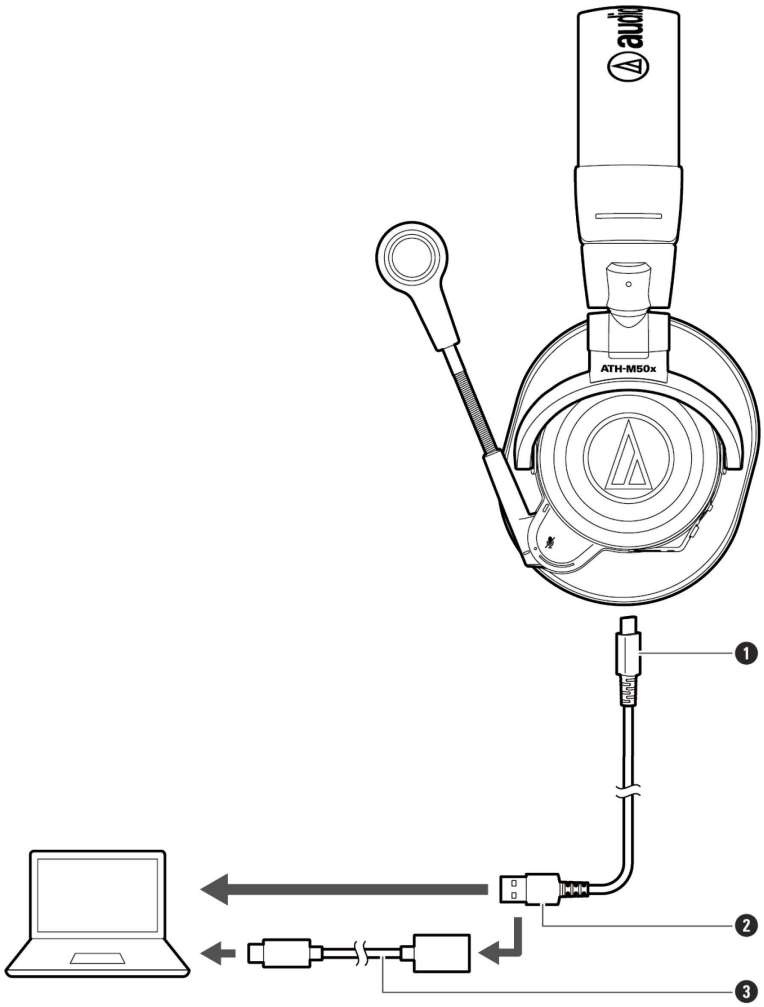


1. USB Type-C
2. USB Type-A
3. USB conversion adapter cable (USB Type-A / USB Type-C)

**2** Connect the included USB cable (USB Type-A side) to the computer to start charging.

- When connecting to a USB Type-C port, use the included USB conversion adapter cable (USB Type-A to USB Type-C).
- While charging, the indicator lamp lights or flashes as follows. (It may take several seconds for the indicator lamp to light.)

| Indicator lamp | Status |
|---|---|
| Lights red (flashes pink at 5-second intervals) | Charging |
| Flashes blue at 5-second intervals | Fully charged |
| Off | Charging error[1] |

[1] The headset may be hot. Allow the temperature of the headset to cool sufficiently before charging in a well-ventilated place (10 to 35°C (50 to 95°F)) away from direct sunlight.

**3** When charging is complete, disconnect the USB cable (USB Type-A side) from the computer.

**4** Disconnect the USB cable (USB Type-C side) from the headset's USB connector jack.

| Caution | • When charging, make sure to use the included USB cable. The headset may not charge with cables other than the included USB cable. |
|---|---|

# Charging using a commercially available USB power adapter

- When you connect the headset to a USB power adapter and charging begins, the headset automatically turns off.
- The headset cannot be turned on while charging using a USB power adapter.
- When charging using a USB power adapter, the indicator lamp lights as follows. (It may take several seconds for the indicator lamp to light.)

| Indicator lamp | Status |
|---|---|
| Flashes blue slowly 3 times, then lights red | Charging |
| Off | Charging complete |

# Power supply ON/OFF

## Turning on the headset

**1** Press and hold the power supply / control button (for about 3 seconds).

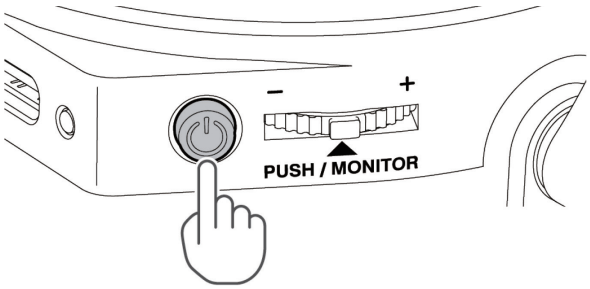


» The indicator lamp lights blue, and then flashes.

| Note | • It may take several seconds for the indicator lamps to light. |
|---|---|

## Turning off the headset

**1** Press and hold the power supply / control button (for about 3 seconds).

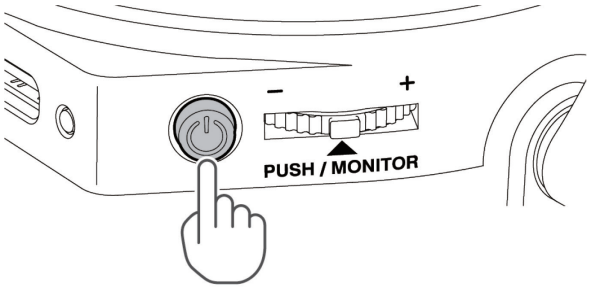


» The indicator lamp lights in blue, and then turns off.

# Connecting via 2.4 GHz digital wireless technology

- To use the headset with a wireless connection, plug the included transceiver into your Windows PC/Mac.
- Wireless connection is not possible while the included USB cable remains connected to a Windows PC/Mac. When making a wireless connection, you need to disconnect the USB cable.

## Connecting

Read the user manual for Windows PC or Mac.

**1** From the power OFF state of the headset, press and hold the power supply / control button (for about 3 seconds).

- The indicator lamp will light in blue, and then flash.

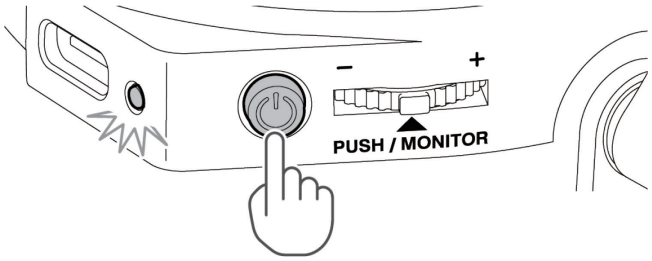


| Note | • The headset automatically turns off after 60 seconds of not being connected to the transceiver. |
|---|---|

**2** Attach the included transceiver to the Windows PC/Mac.

- When connecting to a USB Type-C port, use the included USB conversion adapter cable (USB Type-A to USB Type-C).
- The indicator lamp will light in blue, and then flash.

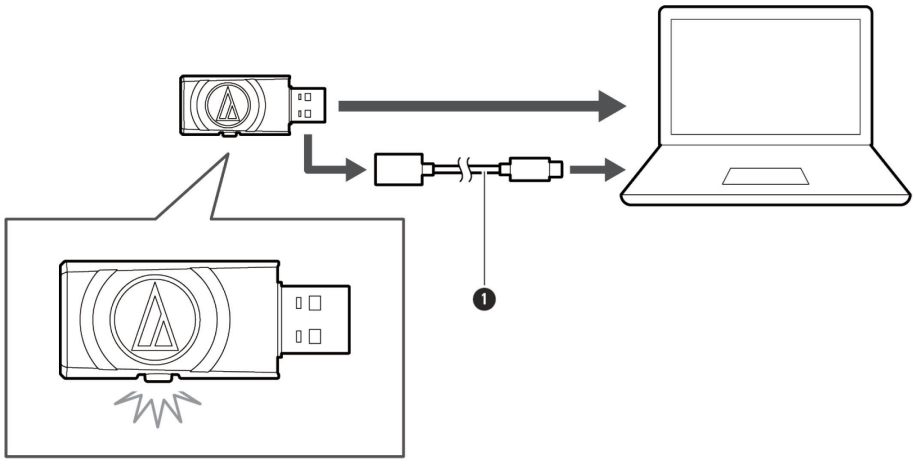


❶ USB conversion adapter cable (USB Type-A / USB Type-C)

**3** The headset pairs automatically.

» The voice guidance will play the message “Connected”, and the indicator lamps on the headset and the transceiver will flash at 5-second intervals. Pairing is now complete.

**4** Check the sound settings of the Windows PC/Mac and make sure that "ATH-M50xSTS-WL" is selected.

## Windows

**1** Open the Start Menu and click “Settings”.

**2** Click “System”.

**3** Click “Sound”.

**4** In “Output” and “Input”, confirm that “ATH-M50xSTS-WL” is selected.

- If the headset is not selected, select the headset.

| Note | • Depending on the app or software being used, it may be necessary to switch the output and input for that app or software to this headset. |
|---|---|

## macOS

**1** Click the Apple icon and select “System Settings”.

**2** Click “Sound”.

**3** In “Output” and “Input”, confirm that “ATH-M50xSTS-WL” is selected.

- If the headset is not selected, select the headset.

| Note | • Depending on the app or software being used, it may be necessary to switch the output and input for that app or software to this headset. |
|---|---|

# Wearing the headset

**1** Put the side of the headset marked “L” (LEFT) onto the left ear and the side marked “R” (RIGHT) onto the right ear, slide the slider up and down so that the earpads cover the ears, and then adjust the headband.

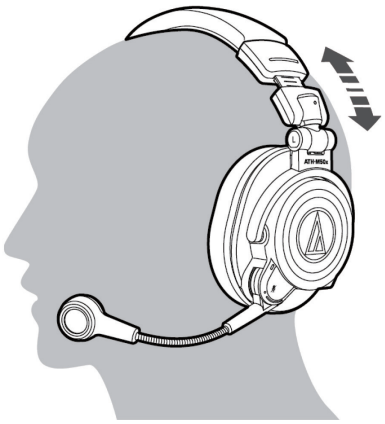

**2** Adjust the microphone so it faces your mouth.

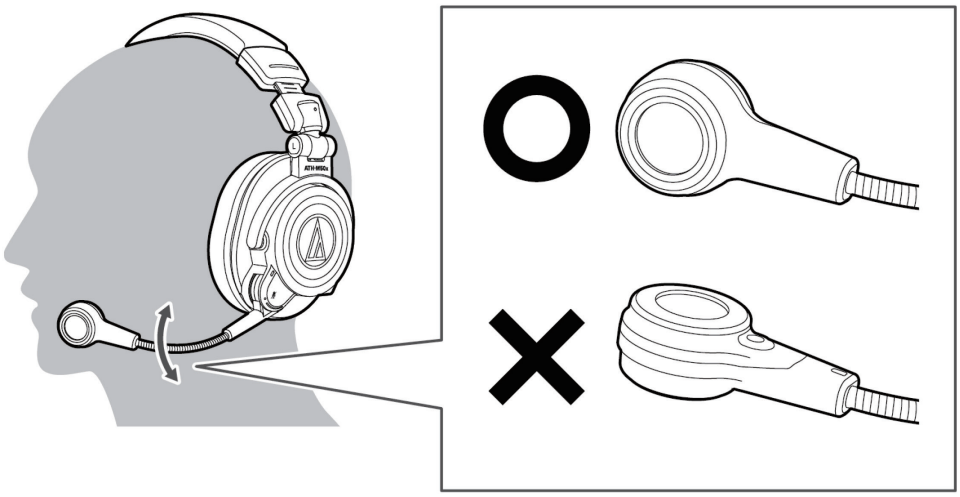

## Swivel mechanism

You can fold the housing so that it lies flat.

- The swivel mechanism cannot rotate more than 90 degrees. Do not apply excessive force.

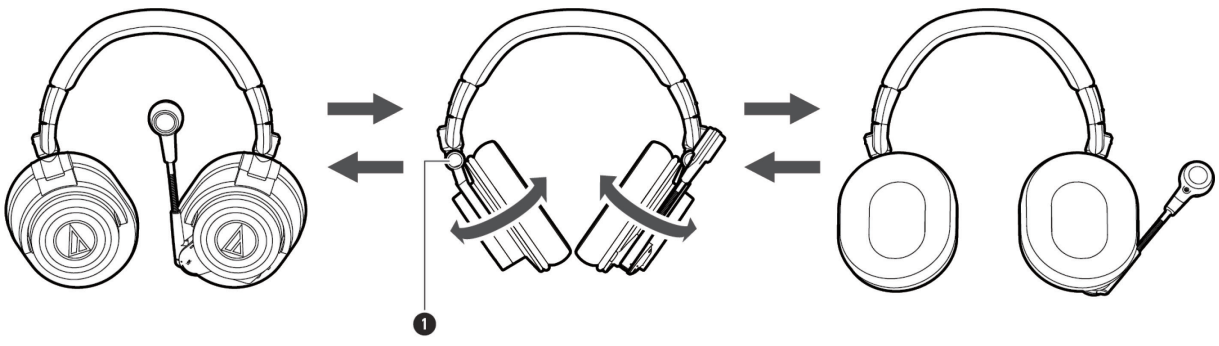


❶ Joint

# Compact folding

You can fold the housing into the inner side of the headband using the joints at the fulcrum.

- Be careful so as not to get your fingers caught in the joints.
- When using the headset, make sure to return the housings to their original positions.

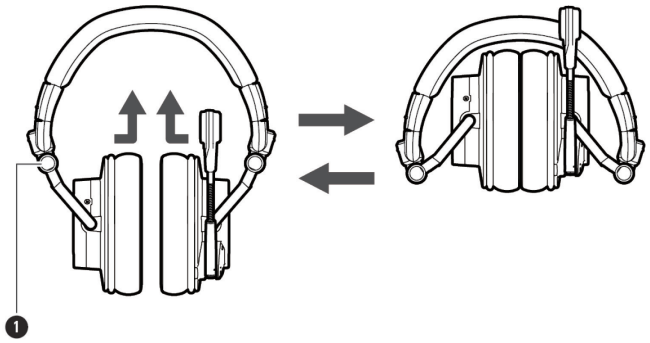


❶ Joint

# Using the headset

## Adjusting the headphone volume

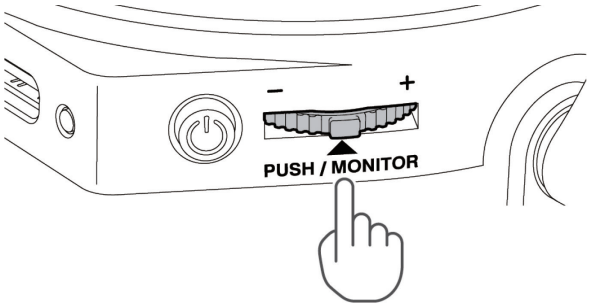


| Operation | Function |
|---|---|
| Slide the monitor dial toward the – or + side. | You can adjust the headphone volume. A confirmation tone is played when the volume reaches the maximum or minimum level. |

## Monitoring your voice (sidetone function)

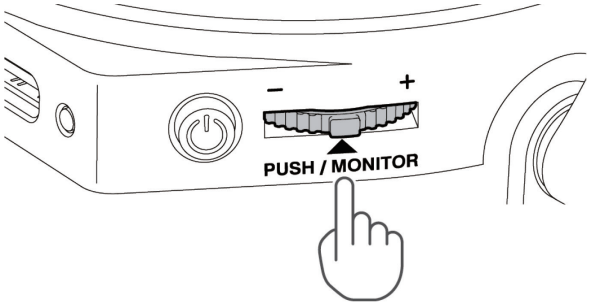


| Operation | Function |
|---|---|
| Short-press the monitor dial | You can monitor your voice while using it. Each time the monitor dial is pressed, it switches the sidetone function between ON and OFF. |
| Continue sliding the monitor dial toward the – and + sides. | You can adjust the volume of your voice. When the volume reaches the maximum level, the voice guidance will play “Max”. When it reaches the minimum level, the voice guidance will play “Minimum”. |

# Noise reduction function

The noise reduction function reduces ambient noise picked up by the microphone to transmit your voice more clearly.

- Select one of two noise reduction levels, or select “OFF”, to suit your environment.
- Not all ambient noise can be reduced.
- Depending on the type of noise and the environment, the noise reduction function may not be fully effective.

| Level | Description |
|---|---|
| Noise reduction (Low) | Suitable for reducing steady noise, such as computer fan noise and air conditioning noise. |
| Noise reduction (High) | Uses a trained AI model to reduce noise such as keyboard typing and computer fan noise. |
| Noise reduction (OFF) | Select “OFF” when you do not want to use the noise reduction function. |

**1** Short-press the power supply / control button.

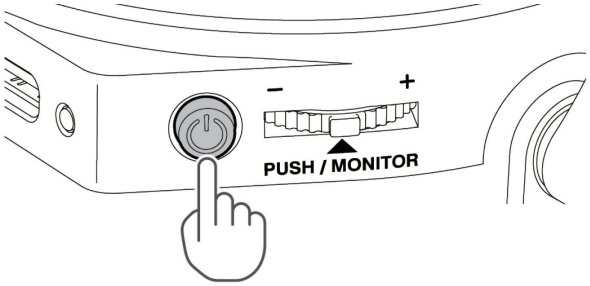


» Each short press switches the noise reduction level, and voice guidance will play.

# Muting the microphone

**1** Moving the microphone up mutes the microphone.

- To unmute, move the microphone down.

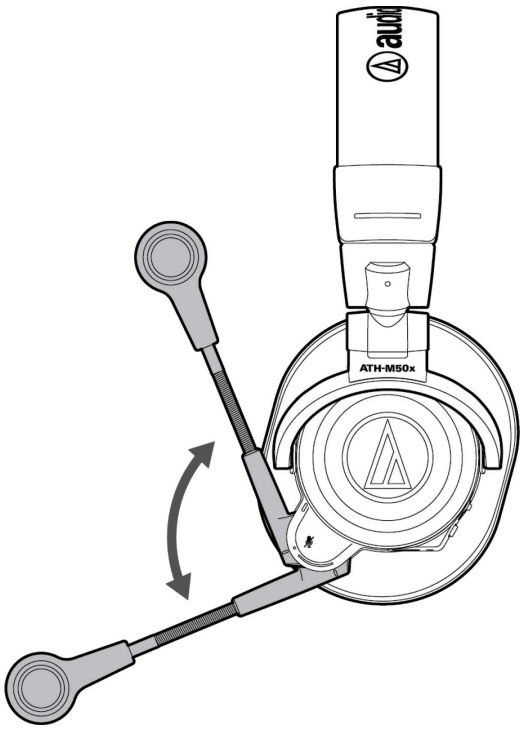

# Making a wired connection

This headset can also be used with a wired connection by connecting the included USB cable.

- If your computer's USB port is USB Type-C, connect the included USB conversion adapter cable (USB Type-A to USB Type-C) to the USB cable.
- Connecting the included USB cable automatically switches the headset to wired connection mode. In wired connection mode, you cannot turn the power ON/OFF using the power supply / control button.
- When connecting to a computer for the first time, the headset will be automatically recognized, and the required driver will be installed.

**1** Connect the included USB cable (USB Type-C side) to the USB port of the headset.

- The included USB cable is designed for exclusive use with the headset. Do not use any other USB cable.
- When inserting the USB cable into the USB port, insert it directly (horizontally).

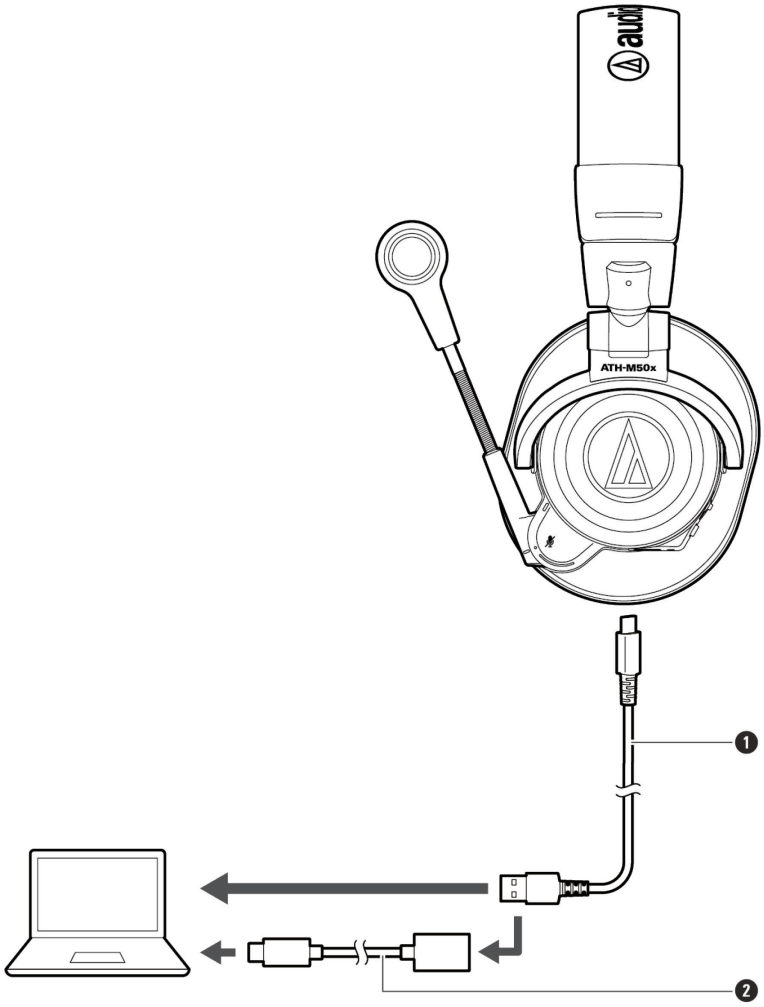


❶ USB cable (2 m (6.6'), USB Type-C / USB Type-A)
❷ USB conversion adapter cable (USB Type-A / USB Type-C)

**2** Connect the included USB cable (USB Type-A side) to the computer.

- When connecting to a USB Type-C port, use the included USB conversion adapter cable (USB Type-A to USB Type-C).

**3** Check the sound settings of the Windows PC/Mac and make sure that "ATH-M50xSTS-WL-USB" is selected.

- If the transceiver and USB cable are connected at the same time, audio input and output may occasionally be unavailable. In this case, check the sound settings.

## Windows

**1** Open the Start Menu and click “Settings”.

**2** Click “System”.

**3** Click “Sound”.

**4** In “Output” and “Input”, confirm that “ATH-M50xSTS-WL-USB” is selected.

- If the headset is not selected, select the headset.
- If “ATH-M50xSTS-WL” remains selected for the wireless connection, it will automatically switch to “ATH-M50xSTS-WL-USB” for the wired connection. If it does not switch, change the setting manually.

| Note | • Depending on the app or software being used, it may be necessary to switch the output and input for that app or software to this headset. |
|---|---|

## macOS

**1** Click the Apple icon and select “System Settings”.

**2** Click “Sound”.

**3** In “Output” and “Input”, confirm that “ATH-M50xSTS-WL-USB” is selected.

- If the headset is not selected, select the headset.

| Note | • Depending on the app or software being used, it may be necessary to switch the output and input for that app or software to this headset. |
|---|---|

# Indicator lamp display (headset)

The headset's indicator lamp lights or flashes to indicate the following operating states.

## During wireless connection

### Pairing

| Status | Indicator lamp display pattern |
|---|---|
| Searching for devices | Flashing blue at short intervals |

### Connecting

| Status | Indicator lamp display pattern |
|---|---|
| Connecting | Flashing blue in 5-second intervals |

### Battery level

| Status | Indicator lamp display pattern |
|---|---|
| Battery level is low | When the headset is turned on with a low battery level, the indicator lamp flashes red 3 times. |

### Noise reduction

| Status | Indicator lamp display pattern |
|---|---|
| Noise reduction ON | Flashes blue twice at 5-second intervals |

# During charging

## Charging using a computer with the included USB cable

| Status | Indicator lamp display pattern |
|---|---|
| Charging | Lights red (flashes pink at 5-second intervals) |
| Fully charged | Flashes blue at 5-second intervals |
| Charging error[1] | Off |

[1] The headset may be hot. Allow the temperature of the headset to cool sufficiently before charging in a well-ventilated place (10 to 35°C (50 to 95°F)) away from direct sunlight.

## Charging using a USB power adapter

| Status | Indicator lamp display pattern |
|---|---|
| Charging | Flashes blue slowly 3 times, then lights red |
| Fully charged | Off |

# During wired connection

| Status | Indicator lamp display pattern |
|---|---|
| Wired connection (charging) | Flashes blue slowly 3 times, then lights red. After that, flashes pink at 5-second intervals. |
| Wired connection (fully charged) | Flashes blue slowly 3 times, then flashes blue at 5-second intervals. |
| Noise reduction ON (charging) | Lights red (flashes pink twice at 5-second intervals) |
| Noise reduction ON (fully charged) | Flashes blue twice at 5-second intervals |
| When the USB cable is disconnected | Flashing blue at short intervals |

# Indicator lamp display (transceiver)

The transceiver's indicator lamp lights or flashes to indicate the following operating states.

## Pairing

| Status | Indicator lamp display pattern |
|---|---|
| Searching for devices | Flashing blue at short intervals |

## Connecting

| Status | Indicator lamp display pattern |
|---|---|
| Connecting | Flashing blue in 5-second intervals |

# Noise reduction

| Status | Indicator lamp display pattern |
|---|---|
| Noise reduction ON | Flashes blue twice at 5-second intervals |

# Voice guidance

The headset plays English voice guidance in the following situations.

| Situation | Voice guidance |
|---|---|
| Power is turned on | Voice guidance varies depending on the battery level.<br>Battery level high<br>Battery level medium<br>Battery level low |
| Wireless connection | Connected |
| Wireless connection disconnected | Disconnected |
| Noise reduction | Voice guidance varies depending on the noise reduction level.<br>Noise reduction low<br>Noise reduction high<br>Noise reduction off |
| Your voice volume (maximum) | Max |
| Your voice volume (minimum) | Minimum |
| Battery level is low | Low battery |
| No power due to dead battery | Please recharge |

# Cleaning

Get into the habit of regularly cleaning the headset to ensure that it will last for a long time. Do not use alcohol, paint thinners, or other solvents for cleaning purposes.

- Use a dry cloth to clean the headset.
- To clean the earpads and headband, wipe with a dry cloth. Earpads and headband may fade if sweat or water dries on them. If the earpads and headband get wet, we recommend wiping them with a dry cloth and allowing them to dry in the shade.
- Immediately wipe off any moisture such as sweat from operating areas such as the buttons. Failure to do so may result in a malfunction due to corrosion.
- Wipe away any perspiration or dirt from the cable with a dry cloth immediately after use. Failure to clean the cable may cause it to deteriorate and harden over time, resulting in malfunction.
- Wipe the cable's USB plug with a dry cloth if dirty.

| | |
|---|---|
| Caution | • If the headset will not be used for an extended period of time, store it in a well-ventilated place free from high temperatures and humidity.<br>• Earpads are consumable parts. The earpads deteriorate over time due to use or storage. Contact your local Audio-Technica dealer for earpad replacement or other repairs. |

# Pairing manually

Manual pairing is required in the following three cases.

## After updating the firmware

After updating the headset's firmware, perform the following operation.

- Use our dedicated software "USB Device Update Utility" to update the headset's firmware.
- Visit our website for the latest firmware.

**1** After updating the headset's firmware, turn on the headset.

- A confirmation tone is played, and the indicator lamp starts flashing blue.

**2** Attach the included transceiver to the Windows PC/Mac, and short-press the transceiver's button.

- When connecting to a USB Type-C port, use the included USB conversion adapter cable (USB Type-A / USB Type-C).
- The indicator lamp starts flashing blue.

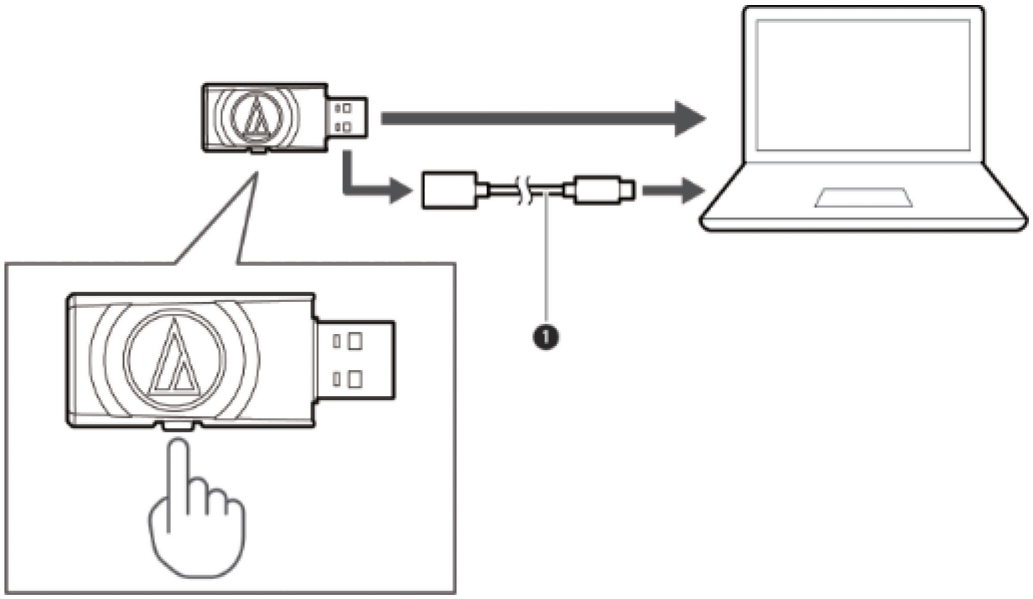


❶ USB conversion adapter cable (USB Type-A / USB Type-C)

**3** The headset pairs.

» The voice guidance will play the message "Connected", and the indicator lamps on the headset and the transceiver will flash at 5-second intervals. Pairing is now complete.

# After purchasing a new transceiver

If you have lost the transceiver and purchased a new one, you need to pair the headset again.

**1** With the headset turned on, short-press the power supply / control button 3 times in quick succession.

- When a confirmation tone is played, the indicator lamp starts flashing blue.

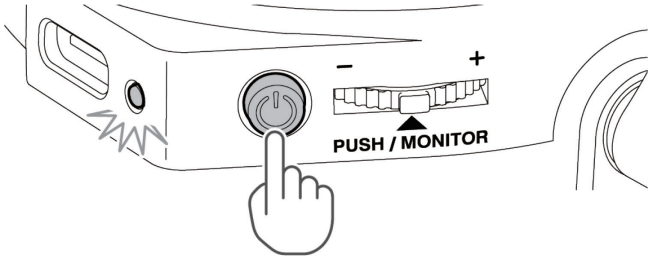


**2** Attach the new transceiver to the Windows PC/Mac.

- When connecting to a USB Type-C port, use the included USB conversion adapter cable (USB Type-A / USB Type-C).
- The indicator lamp starts flashing blue.

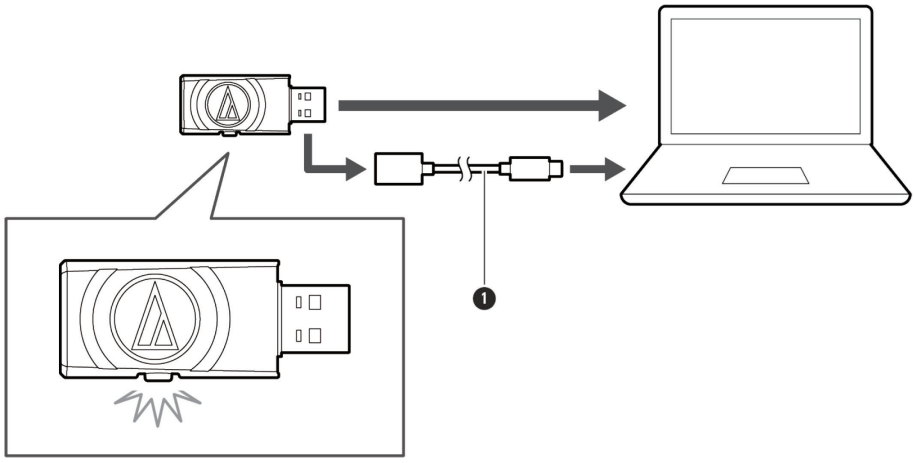


❶ USB conversion adapter cable (USB Type-A / USB Type-C)

**3** The headset pairs.

» The voice guidance will play the message “Connected”, and the indicator lamps on the headset and the transceiver will flash at 5-second intervals. Pairing is now complete.

# When using a different transceiver

If you own more than one of this headset, for example, and want to pair the headset with a transceiver other than the one it is currently paired with, perform the following operation.

**1** With the headset turned on, short-press the power supply / control button 3 times in quick succession.

- When a confirmation tone is played, the indicator lamp starts flashing blue.

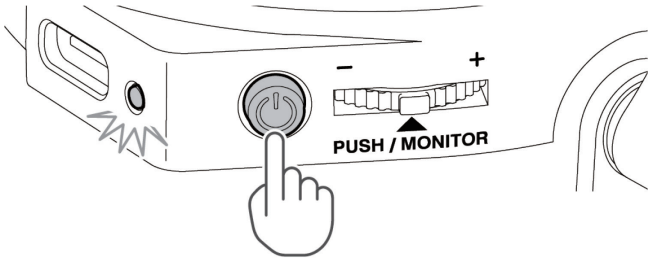


**2** Attach the other transceiver to the Windows PC/Mac, and short-press the transceiver's button.

- When connecting to a USB Type-C port, use the included USB conversion adapter cable (USB Type-A / USB Type-C).
- The indicator lamp starts flashing blue.

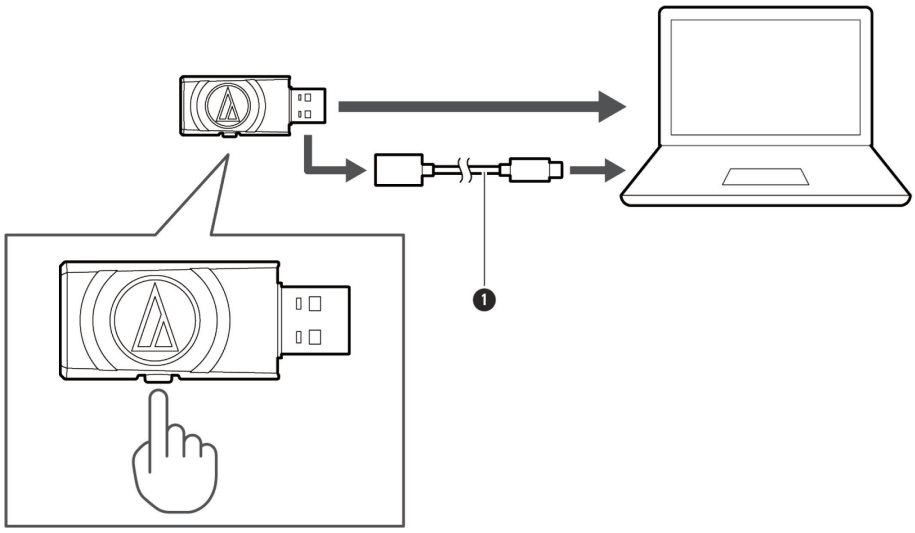


❶ USB conversion adapter cable (USB Type-A / USB Type-C)

**3** The headset pairs.

» The voice guidance will play the message "Connected", and the indicator lamps on the headset and the transceiver will flash at 5-second intervals. Pairing is now complete.

# About the reset function

If the headset is not functioning properly, reset the headset.

**1** With the headset connected to a computer using the included USB cable, press and hold the power supply / control button (for about 15 seconds).

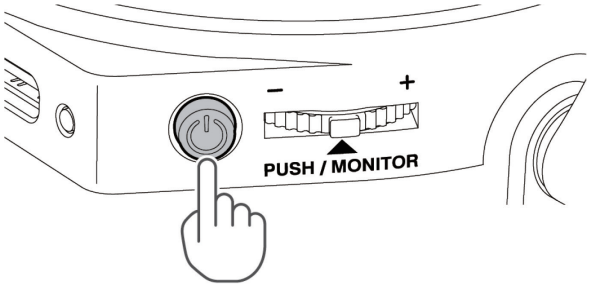


**2** When the indicator lamp turns off, release the power supply / control button.

» When the indicator lamp lights, reset is complete.

| Note | • Resetting it will not change the sound settings on the computer. |
|---|---|

# Replacing the battery

The battery in this headset can be replaced, but replacement may not be possible in some countries or regions. Please contact the inquiry desk in your country of residence to check about battery replacement.

- Use the separately sold rechargeable battery exclusively for the “ATH-M50xSTS-WL.”
- This headset is precision equipment. Please replace the battery with the utmost care.
- Do not use metal tools when removing or installing the battery. If the sharp part of a tool damages the battery’s insulation, a short circuit may occur, potentially causing smoke or fire.
- Do not lose the screws when replacing the battery.
- When replacing the battery, do not drop the screw inside the headphones. Contact with magnetic components may cause malfunction.
- Do not drop or damage the removed battery. Properly dispose of the removed battery in accordance with local laws and regulations. If you have any questions, please contact your local Audio-Technica dealer.
- After turning off the headset, carefully replace the battery by following the procedure. Note that any malfunction of this headset caused by improper installation by the customer, as well as any accidents such as smoke or fire resulting from battery replacement, is not covered by the warranty, and we cannot assume responsibility for such incidents.

**1** Remove the two screws securing the housing on the R side.

- Make sure not to lose the screws you removed.

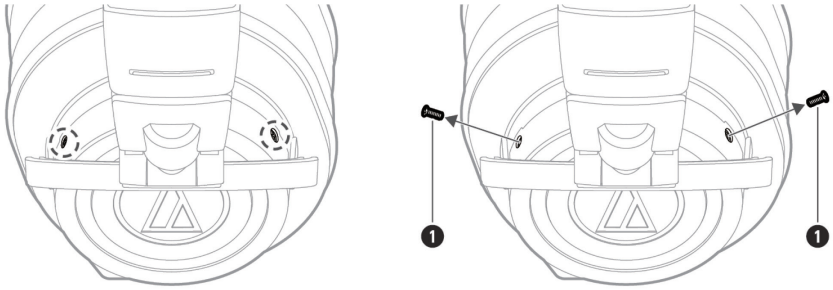


❶ Screw

**2** Lift the upper part of the housing in the direction of ❶, tilt it in the direction of ❷, and remove it.

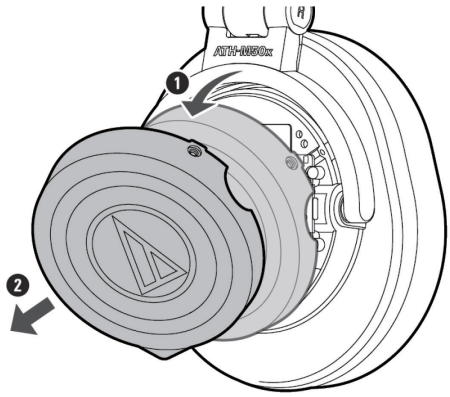

**3** Check the battery connector, then unplug it from the socket.

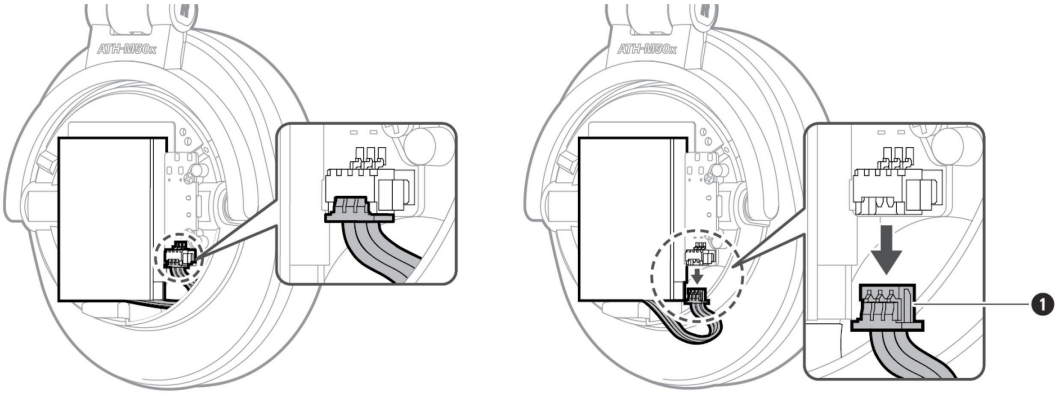


1 Connector

**4** Remove the battery.

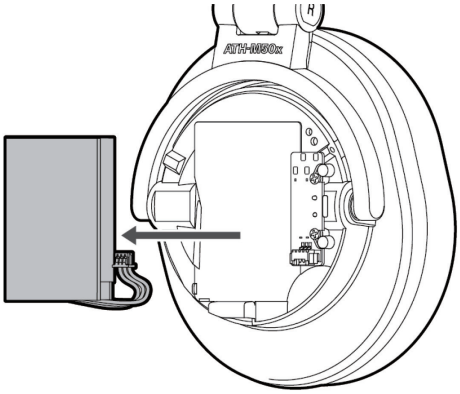


**5** Attach the battery securing adhesive seal to the new battery, then remove the release liner.

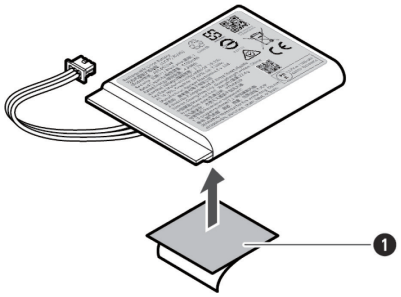


1 Battery securing adhesive seal

**6** Attach the sealed side of the battery to the headphone side.

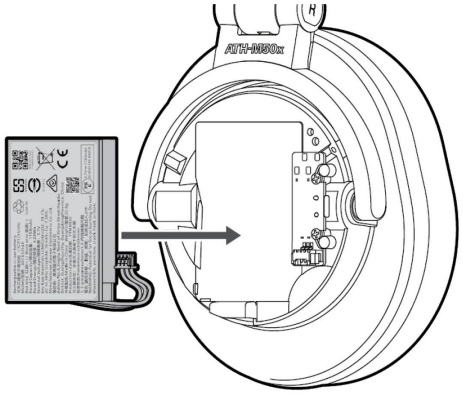


**7** Insert the battery connector into the socket.

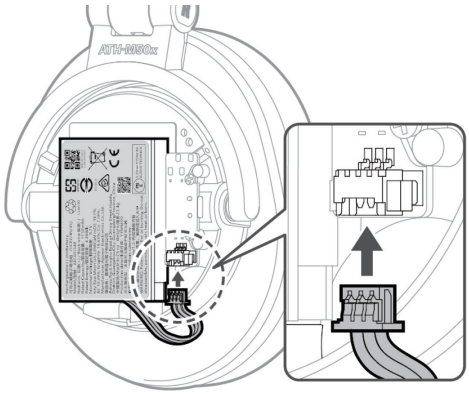


**8** Align the protruding part of the housing with the recessed part of the headphones.

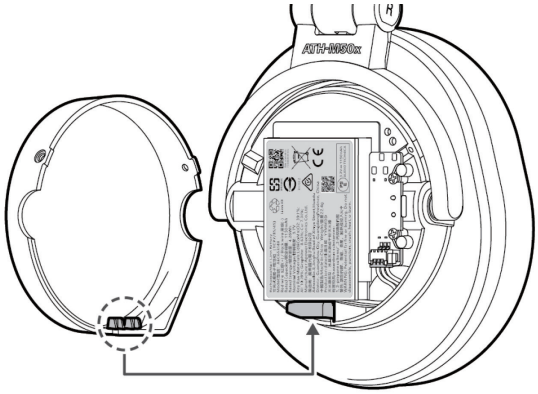

**9** Install the housing.

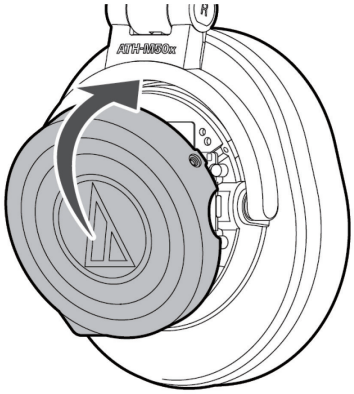

**10** Attach the screws.

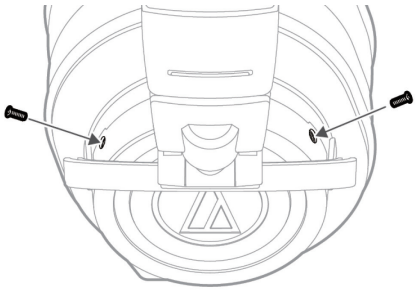

| Caution | • Do not dispose of old batteries in trash cans or similar receptacles.<br>• For recycling, check the battery disposal methods in your area. |
|---|---|

# Troubleshooting

## ? The headset and transceiver become disconnected.

- Check that you are not using it near a Wi-Fi router. In rare cases, radio interference may cause the connection between the headset and the transceiver to be lost.
- Check that the transceiver is not connected to a USB 3.0 port. When using a USB 3.0 port, signal interference may very rarely occur and affect the wireless connection. Use a USB 2.0 port, or use the included USB conversion adapter cable (USB Type-A / USB Type-C) to connect to a USB Type-C port.

# Specifications

## Headphones

| | |
|---|---|
| Type | Closed-back dynamic |
| Driver | 45 mm |
| Sensitivity | 99 dB/mW |
| Frequency response | 20 to 22,000 Hz |
| Maximum input power | 1,600 mW |

## Microphone

| | |
|---|---|
| Type | Back electret condenser |
| Polar pattern | Unidirectional |
| Frequency response | 50 to 20,000 Hz (at 3 cm) |

## Transceiver

| | |
|---|---|
| RF output | 10 mW EIRP |
| Maximum communication range | Line of sight - approx. 10 m (33') |
| Frequency band | 2.404 GHz to 2.476 GHz |
| Spread spectrum method | AFH |
| Transmission band | 20 to 24,000 Hz |
| Power supply | 5 V DC (USB bus-powered) |
| Dimensions (without connector) | 22 mm (0.87") × 40 mm (1.6") × 11 mm (0.43") (W × D × H) |
| Weight | Approx. 7.5 g (0.26 oz) |

## Communication specifications

| | |
|---|---|
| System operation | USB 2.0 compliant |
| Supported OS | Windows 11<br>macOS Sequoia, macOS Tahoe<br>(Visit our website for the latest information about the product.) |
| Supported sample rates | 48 kHz |
| Supported bit depth | Input: 24-bit<br>Output: 16-bit |

# Other

| | |
|---|---|
| Power supply | Wireless connection: DC 3.7 V lithium ion battery<br>Wired connection: USB power (5 V DC) |
| Charging time | Approx. 3.5 hours |
| Operating time | Continuous transmission time: Max. approx. 24 hours |
| Weight (without cable) | Approx. 365 g (13 oz) |
| Operating temperature | 5°C to 40°C (41°F to 104°F) |
| Accessories | Transceiver (USB Type-A), Earpads, USB cable (2.0 m (6.6'), USB Type-C / USB Type-A), USB conversion adapter (USB Type-A / USB Type-C). |
| Sold separately | Transceiver (USB Type-A), Earpads, USB cable (2.0 m (6.6'), USB Type-C / USB Type-A), USB conversion adapter (USB Type-A / USB Type-C) |

- For product improvement, the product is subject to modification without notice.

# Trademarks

- USB Type-C™ is a trademark of USB Implementers Forum.
- Microsoft® and Windows® are registered trademarks of Microsoft Corporation in the United States and/or other countries.
- Microsoft Windows operating system is indicated in its abbreviated form as Windows.
- Mac and macOS are trademarks of Apple Inc., registered in the U.S. and other countries and regions.

**株式会社オーディオテクニカ**
〒194-8666　東京都町田市西成瀬2-46-1
www.audio-technica.co.jp

**Audio-Technica Corporation**
2-46-1 Nishi-naruse, Machida, Tokyo 194-8666, Japan
www.audio-technica.com
©2026 Audio-Technica Corporation
Global Support Contact: www.at-globalsupport.com
382318380-02-01　ver.1 2026.11.01